Date	Changes	REV
2018.09.30	Original	1.0

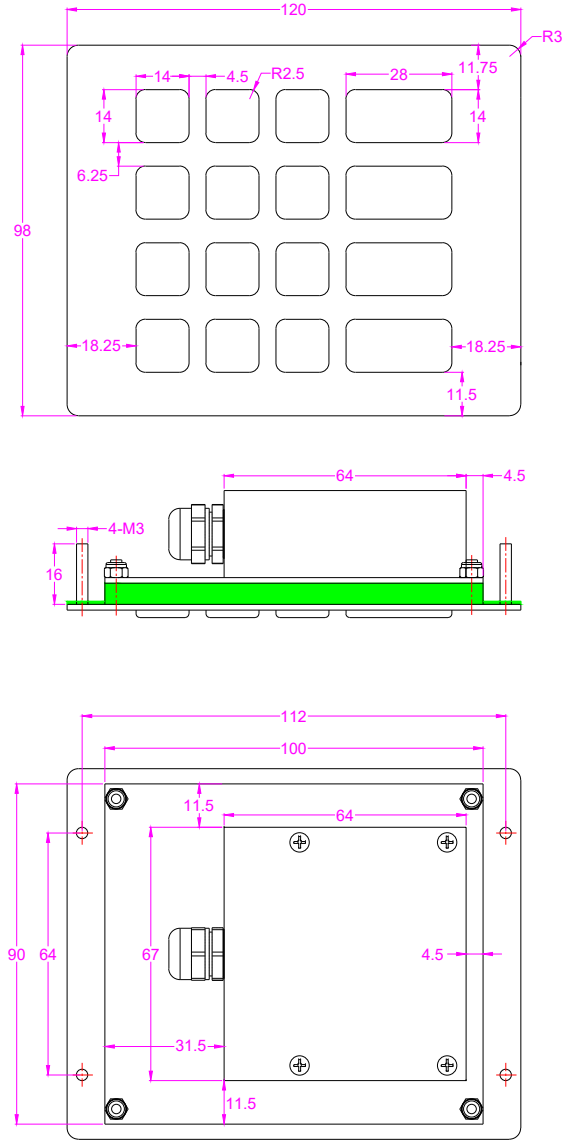

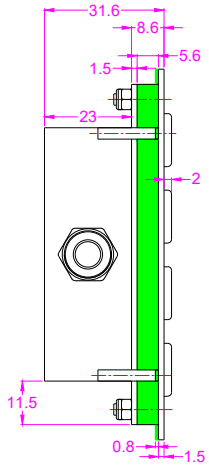

AW-A120KP-BL-DWP