Date	Changes	REV
13.08.2022	Original	1.0

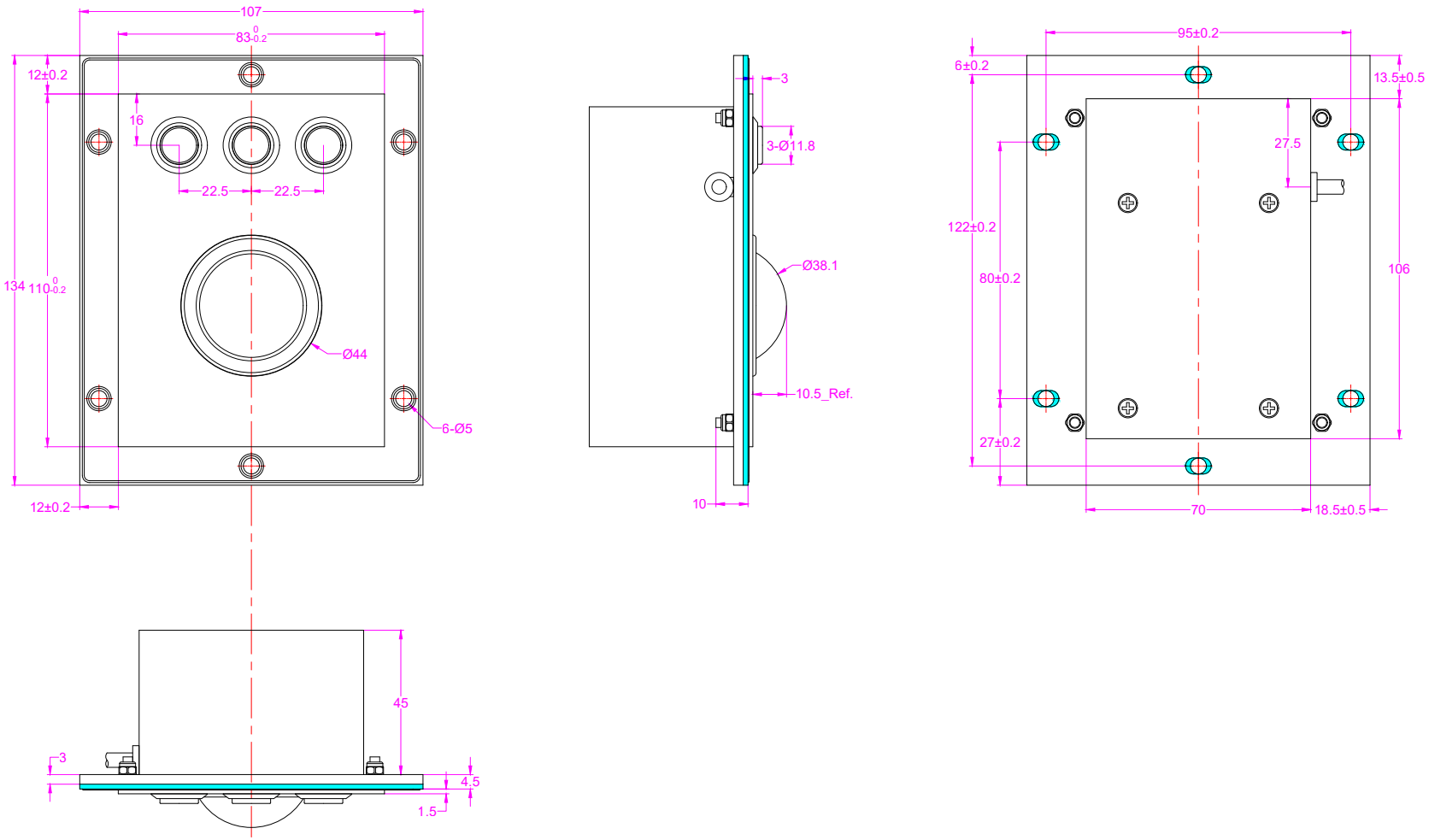

AW-A83-38-OTB-DWP