Date	Changes	REV
2023.11.17	Original	1.0

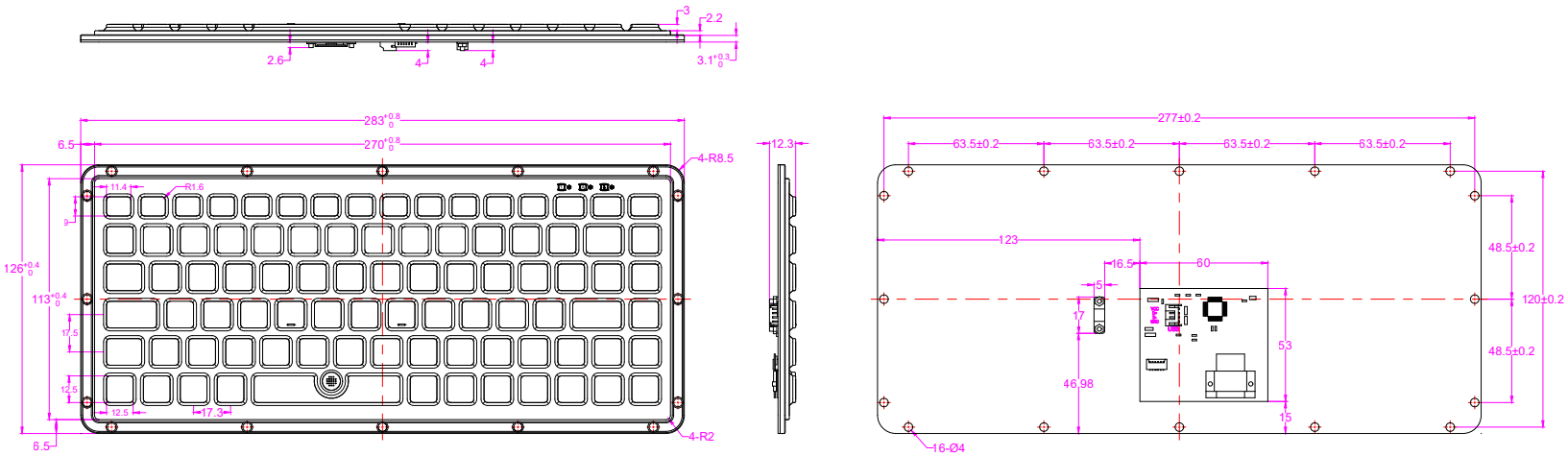

AW-M270-TPT-FN-BL-ML