Date	Changes	REV
2025.08.05	Original	1.0

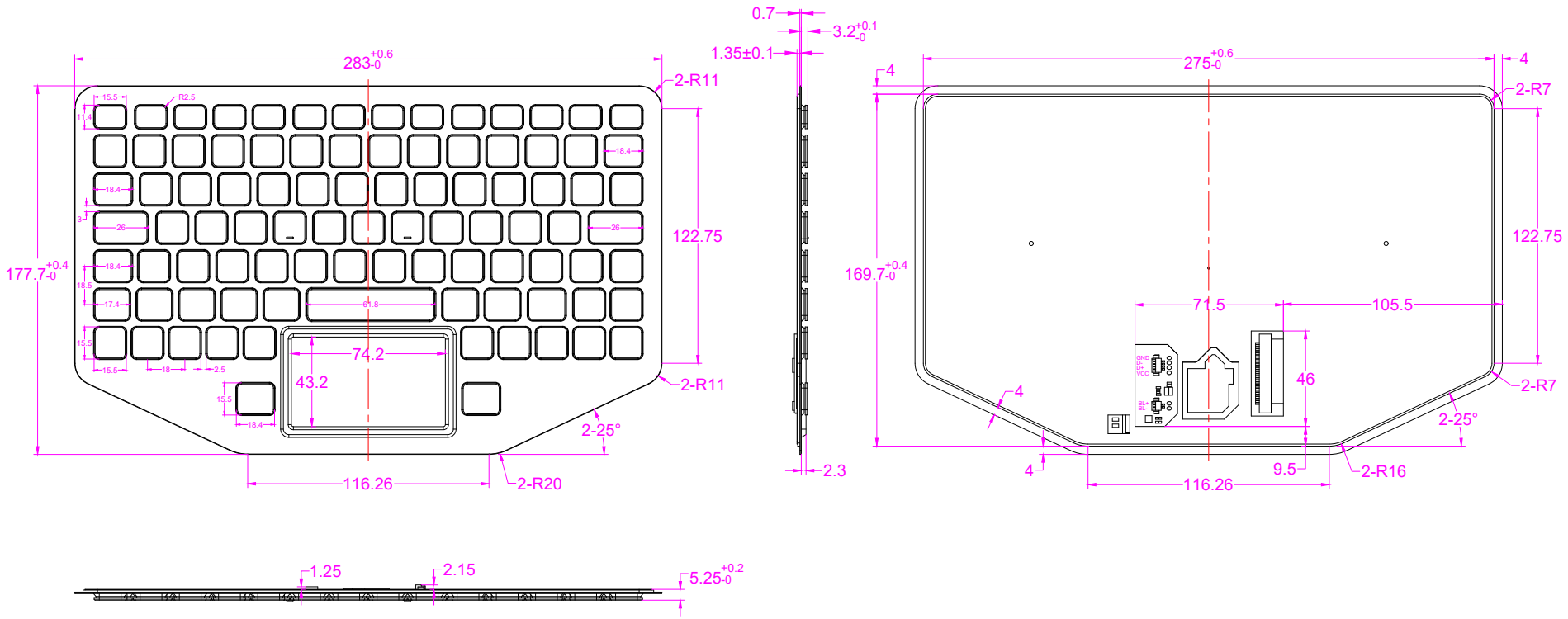

AW-M275TP-FN-BL-FC-KC-ML