| Date | Changes | REV |
|---|---|---|
| 2026.01.06 | Original | 1.0 |
| | | |
| | | |
| | | |

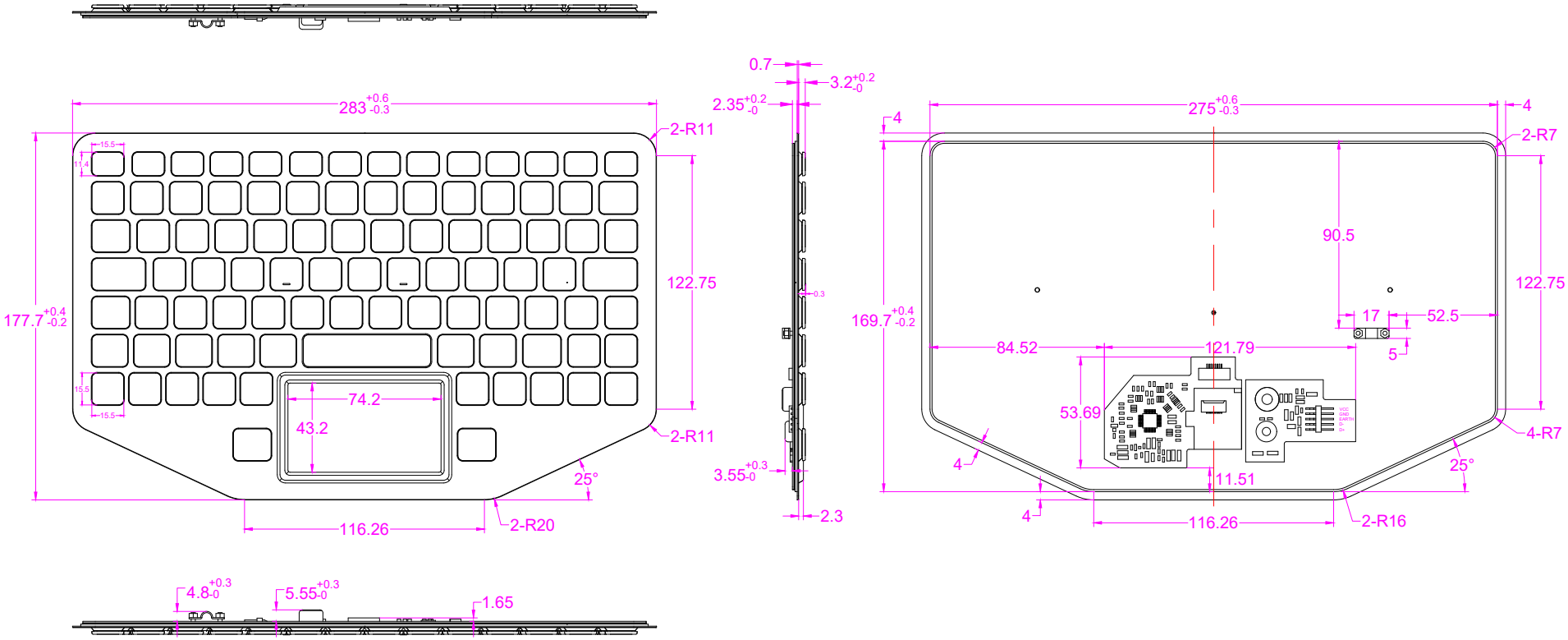


**AW-M275TP-FN-BL-KC-ANA-151B-AL**