Date	Changes	REV
2024.01.16	Original	1.0

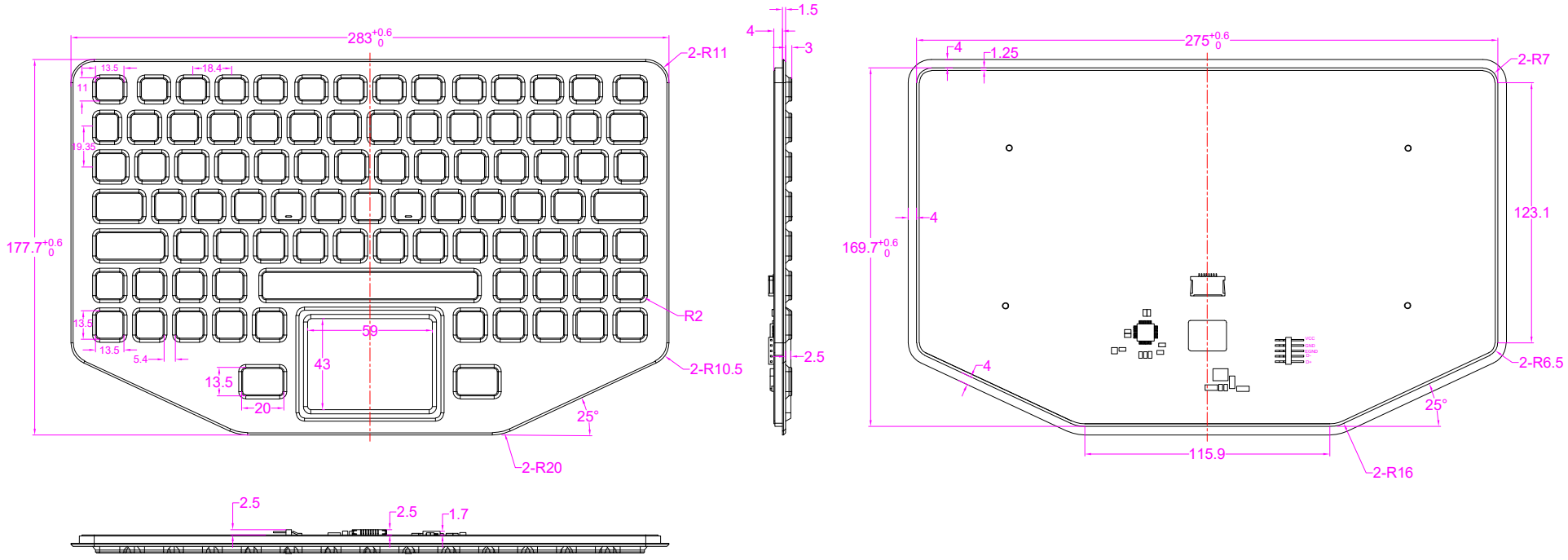

AW-M275TP-FN-BL-ML