Date	Changes	REV
2025.11.10	Original	1.0

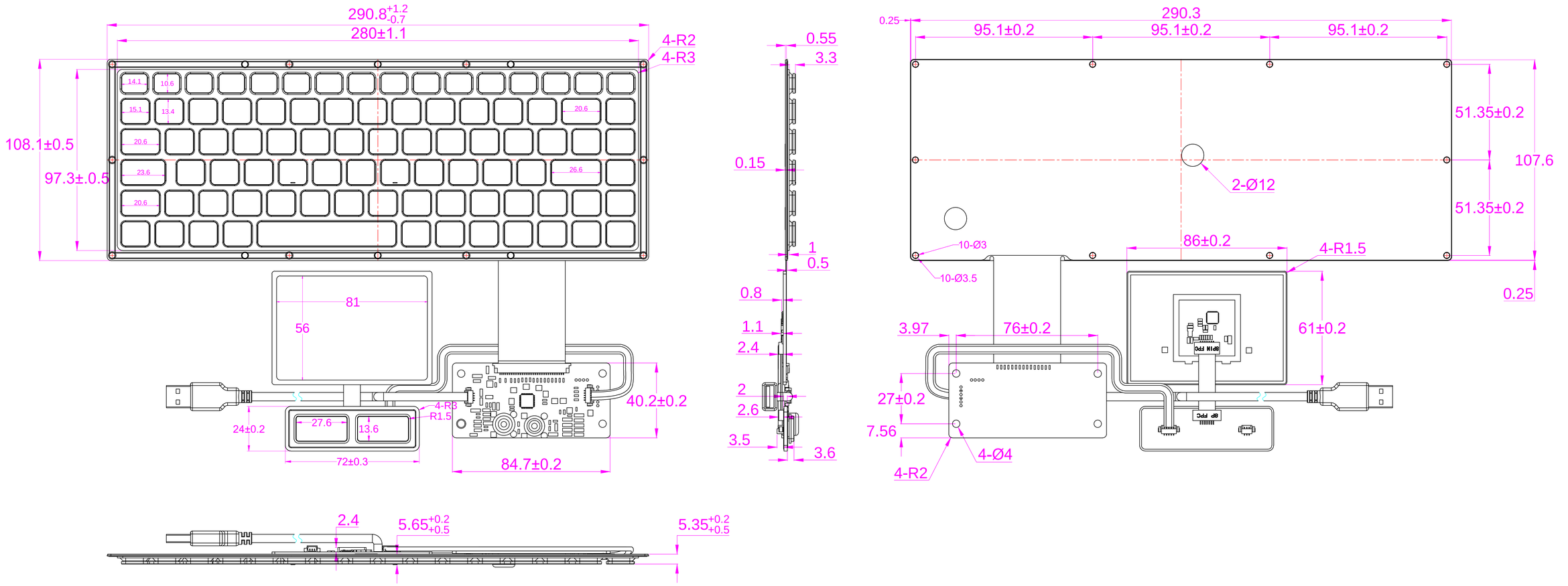

AW-M280-FN-BL-FC-KC-ANA-151B