Date	Changes	REV
2023.09.23	Original	1.0

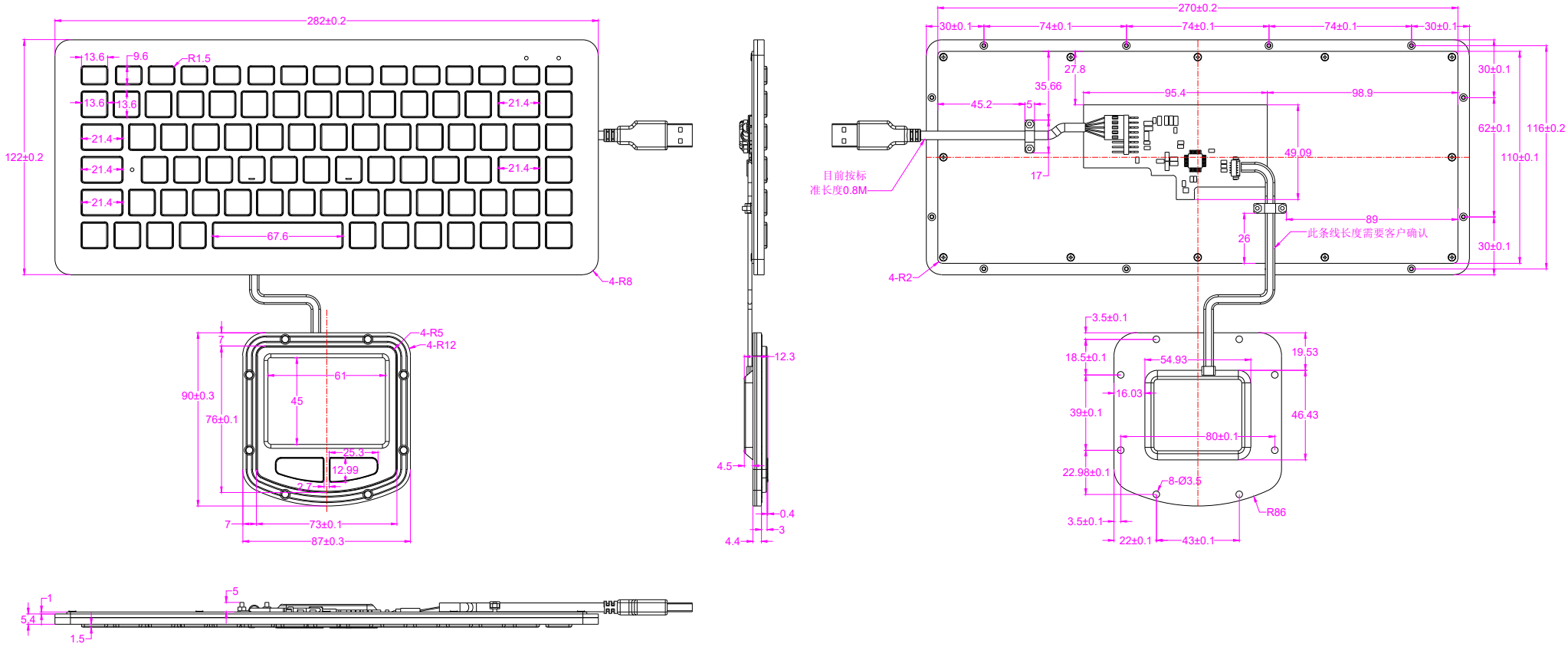

AW-M282-122-FN-BL-IT-ML-DWP