Date	Changes	REV
2025.06.21	Original	1.0

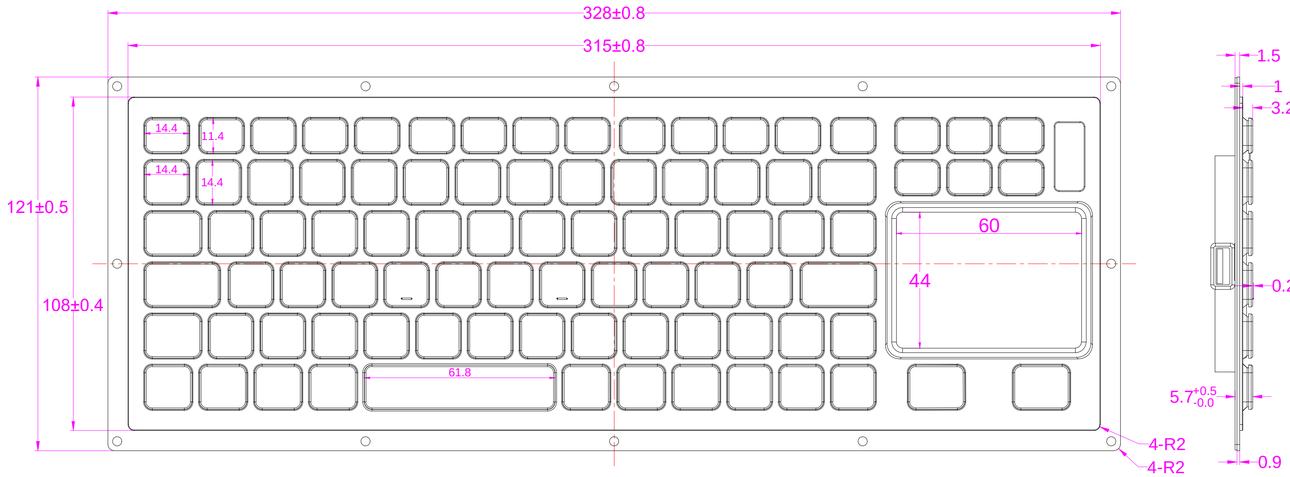

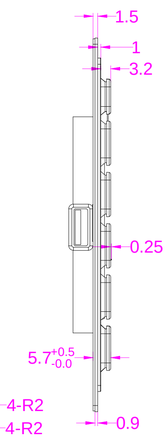

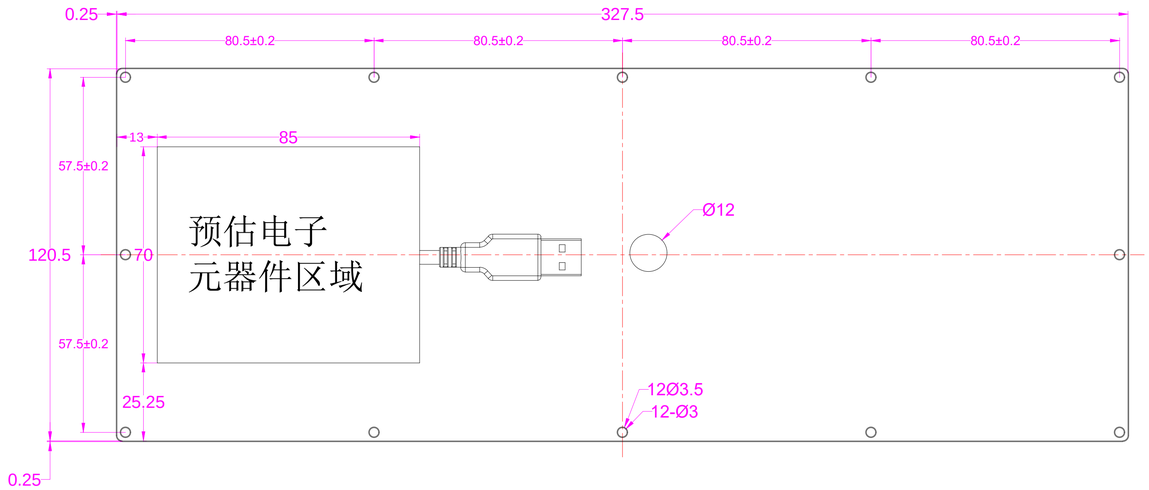

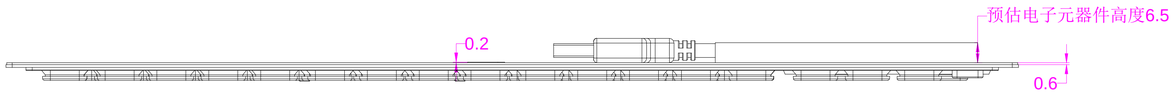

AW-M315TP-FN-BL-FC-KC-ANA-151B